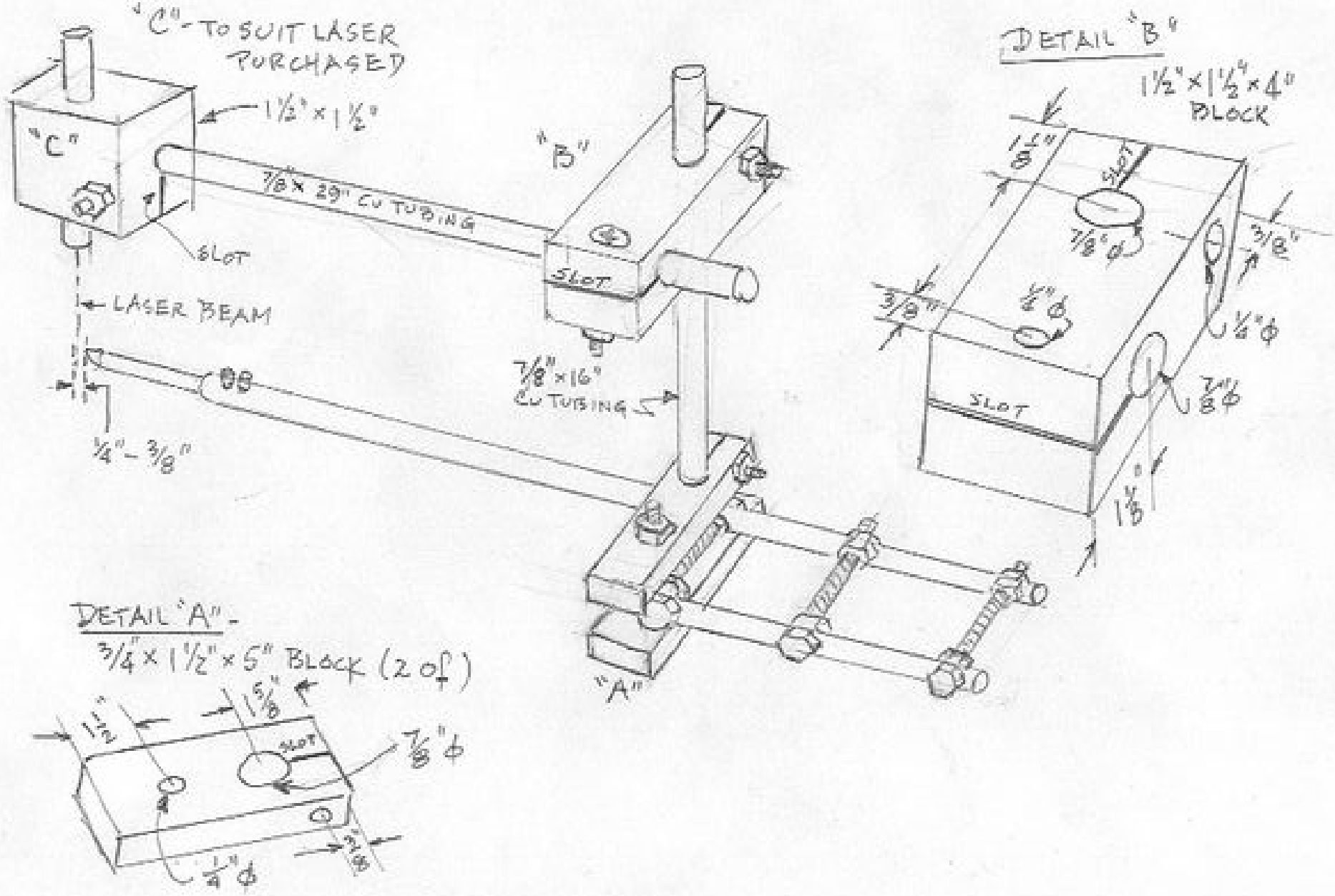FIG. 4 – LASER SUPPORT ATTACHMENT